FOR MODELS:
EFIKWSM

SMART WiFi CONTROLLER INSTALLATION MANUAL

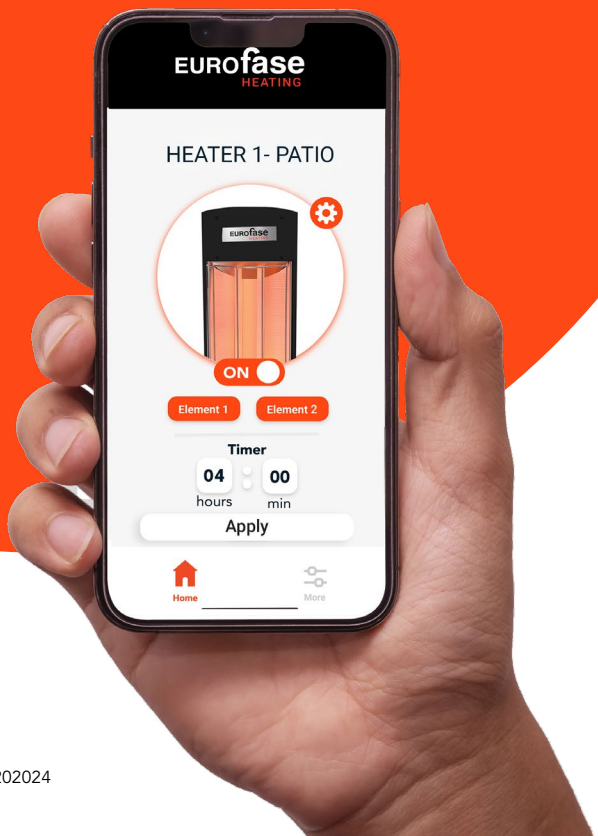

Works with the Eurofase app. Available on:

android iOS

PLEASE SAVE THIS MANUAL FOR FUTURE REFERENCE.

READ THIS MANUAL CAREFULLY.
SEE INSIDE COVER FOR IMPORTANT INFORMATION ABOUT THIS MANUAL.
KEEP INSTRUCTION WITH APPLIANCE FOR FUTURE REFERENCE.

Version EFIKWSM06202024

Thank You

Thank you for choosing Eurofase Heating to meet your heating needs. This manual is designed for our EFIKWSM Smart WiFi Controller.

In order to ensure your controller is installed safely and functions correctly, please take the time to review this manual.

Before installation starts, review the safety information found on page 4 and 5.

Strict adherence to these guidelines is necessary to prevent personal injury or property damage.

Pages 6 through 11 review essential installation and assembly instructions that are extremely important to a safe and efficient installation.

Please keep this manual in a safe place for future reference and urgent needs.

EUROfase HEATING

Contents

WARNINGS ..... Page 4-5

PRODUCT OVERVIEW/WHAT'S IN THE BOX..... Page 6

TECHNICAL SPECIFICATIONS ..... Page 7

ELECTRICAL INSTALLATION..... Page 8

APP SETUP GUIDE..... Page 9-10

FINAL STEP..... Page 11

PLEASE READ ALL INSTRUCTIONS PRIOR TO INSTALLING YOUR EUROFASE HEATING WIFI CONTROLLER

This manual contains important information about the installation, and operation of the Eurofase Heating WiFi Controller. Please pay close attention to the important safety information shown throughout this instruction manual.

GOOD TO KNOW!

For optimal heater performance and longevity, a 15 minute cool down period is recommended after 4 hours of continuous usage.

A LICENSED ELECTRICIAN IS REQUIRED TO INSTALL THIS PRODUCT.

WARNING

- READ MANUAL CAREFULLY before installing or servicing the Eurofase Heating WiFi Controller.
- Improper installation or operation can result in death, severe injury, or property damage.
- Use this Eurofase Heating WiFi Controller only as described in this manual. Any other use not recommended by the manufacturer may cause fire, electric shock, or injury to persons.
- This Eurofase Heating WiFi Controller is intended for fixed installation in accordance to its rating plate either 120V, 208V, or 240V max power supply.
- Installation MUST be performed by a licensed and authorized technician in accordance with National Electrical Code (NEC) or Canadian Electrical Code (CEC), along with other local electrical codes as applicable.
- Eurofase Heating WiFi Controller rated for 240V or less are intended for both residential and commercial use.

WARNING

The WiFi Controller should only be used as described in this manual. Any use not recommended by the manufacturer may result in fire, electric shock, or personal injury.

- Use this Eurofase Heating WiFi Controller only as described in this manual. Any other use not recommended by the manufacturer may cause fire, electric shock, or injury to person (s).
- Improper installation, adjustment, or alteration and failure to follow the warnings and instructions in this manual could result in severe personal injury, death or property damage.
- The manufacturer is not responsible for any damage from improper use. The manufacturer emphasises this Eurofase Heating WiFi Controller should be used in a responsible manner and that all procedures, warnings, and safety instructions contained in this booklet be followed strictly.
- The product must be fixed on surfaces which cannot be damaged by the high temperature. It cannot be hermetically closed. It must be fixed vertically.
- The connection cables must be protected against any accidental impacts, by using proper conduits.
- This Eurofase Heating WiFi Controller is not intended for use in bathrooms, laundry areas and similar indoor locations. Never locate Eurofase Heating WiFi Controller where it may fall into a bathtub or other water container.
- Do not install the Eurofase Heating WiFi Controller directly near a bathtub, shower or swimming pool. Any switches or controls must not be within reach of a person in the bathtub, shower or swimming pool.
- Extreme caution is necessary when the Eurofase Heating WiFi Controller is used by or near children or individuals and whenever the Eurofase Heat WiFi Controller or heater is left operating and unattended.
- This Eurofase Heater WiFi Controller is not intended for use by persons (including children) with reduced physical, sensory or mental capabilities, or lack of experience and knowledge, unless they have been given supervision or instruction concerning use of the appliance by a person responsible for their safety.
- Keep packaging materials out of reach of children.
- Children and adults should be alerted to the hazards of electrocution and should stay away to avoid serious personal injury.
- Children should be carefully supervised when they are in the area of the Eurofase Heating WiFi Controller.
- Do not attempt to alter the Eurofase Heating WiFi Controller in any manner.
- Do not paint any surface of the Eurofase Heating WiFi Controller.
- Do not touch the Eurofase Heating WiFi Controller with wet hands at any time.
- Do not use or store flammable materials near this appliance.
- Do not spray aerosols or flammable materials in the vicinity of the Eurofase Heating WiFi Controller while it is in operation.
- Never operate the Eurofase Heating WiFi Controller in an explosive environment such as areas where petrol or other flammable liquids or vapours are stored.

This Eurofase Heater WiFi Controller is NOT intended to be installed on recreationalvehicles and/or boats.

- Do not run cord under carpeting. Do not cover with throw rugs, runners or the like arrange cord away from traffic area and where it will not be tripped over.
- A Eurofase Heating WiFi Controller has hot and arcing or sparking parts inside. Do not use it in areas where gasoline, paint or flammable liquids are used or stored.
- This Installation manual should not be removed from the site of installation. Installer should leave manual with the customer for future reference.
- Any guard or other protective device removed for servicing (conducted by an authorised person) must be replaced before operating the Eurofase Heating WiFi Controller.
- If the Eurofase Heating WiFi Controller has not been used, or will not be used, for a long period of time, disconnect power supply.
- For the disconnection from the power line, use an all-pole switch with contacts having a dimension of at least 3.5mm.

INSTALLATION

- IMPORTANT - Installation must be carried out by a licensed or authorized person.
- The installer shall ensure the installation in compliance with a local authority, local electrical installation code, municipal building codes, and any other relevant statutory regulations.
- This Eurofase Heating WiFi Controller must only be used no greater than its rating plate that is 120V, 208V or 240V max.

MAINTENANCE / REPAIR

- Installation and repair must be carried out by a qualified & licenced service person only. The Eurofase Heating WiFi Controller should be inspected before use and at least annually serviced & inspected by a qualified & licenced service person.
- Do not perform maintenance until Eurofase Heating WiFi Controller has been turned off and power disconnected.
- Check for damage to the Eurofase Heating WiFi Controller regularly. If damage to the appliance is suspected, discontinue use immediately and contact the supplier or qualified person to repair.
- If any conductor is damaged, it must be replaced by an authorized and licenced person in order to avoid a hazard.
- At the end of this product's useful life, it must not be disposed of as domestic waste, but must be taken to a collection centre for waste electrical and electronic equipment. It is the user's responsibility to dispose of this controller through the appropriate channels at the end of its useful life.

Failure to do so may incur the penalties established by laws governing waste disposal. Proper differential collection and the subsequent recycling, processing and environmentally compatible disposal of waste equipment avoids unnecessary damage to the environment and possible related health risks, and also promotes recycling of the materials used in the appliance. For further information on waste collection and disposal, contact your local waste disposal service, or the place of purchase.

ELECTRICAL CONNECTIONS

- All connections must be rated ccording to rating plate that is either 120V, 208V or 240V max power supply, with an earth connection; at no times exceed its rated requirements.
- Arrange all the necessary safety devices and use only materials that comply with standard electrical installations.
- Signal and power voltage wiring must be separated one from the other if the rating voltage is greater than 240VAC.
- The protective device must protect the building from overcurrents and short circuit.
- A readily accesible disconnect device shall be incorporated in the building installation wiring.
- The cable must have a section properly rated according to the load connected and nominal temperature minimum 60°C.

Product Overview

Transform any patio heater into a smart device with the Eurofase Heating Smart WiFi Controller! Effortlessly switch your heaters on or off, toggle high/low settings on dual element heaters, and set a timer using your iPhone or Android device. Whether it's a new installation or a retrofit, the Eurofase WiFi Controller adds convenience to your outdoor heating experience.

To ensure optimized safety, the hardware includes a built-in auto shut-off feature set to activate after 4 hours of use.

Eurofase Heating WiFi Controller can control heaters with voltages ranging from 120V, 208V or 240V max at the rated amperage.

- Works with the Eurofase app. Available on:

android iOS

- On/Off
- High/Low (Dual element heater)
- Timer
- Manage multiple heaters
- Auto shut-off after 4 hours

INDOOR / OUTDOOR RATED

Intertek

Overview

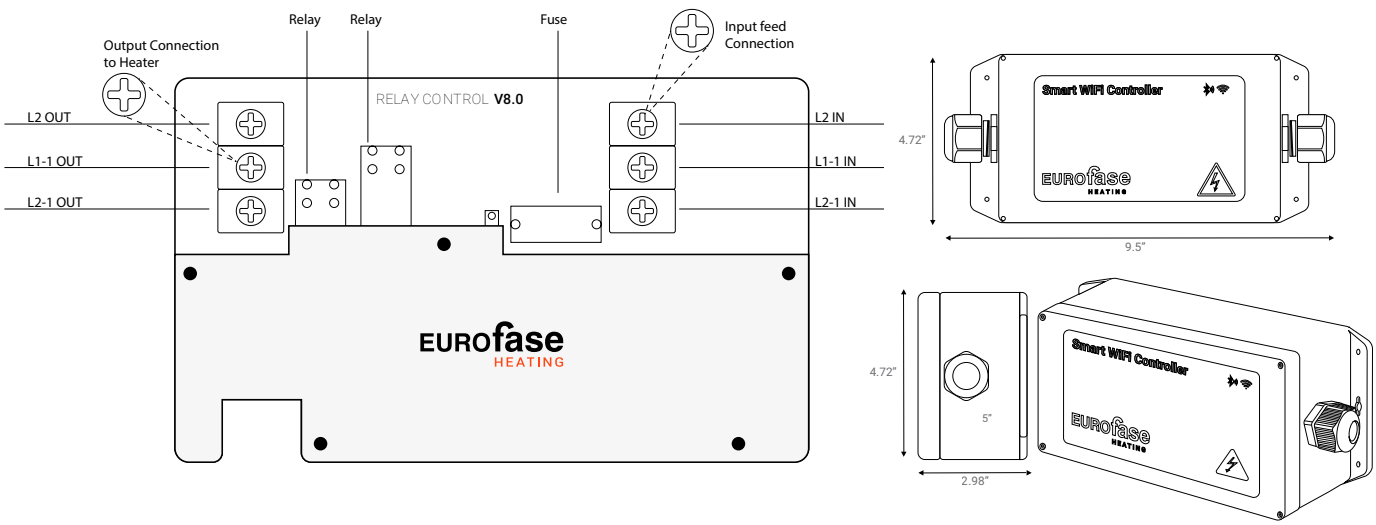

What's in the box? **Please inspect that all parts are included in the package.**

Instruction Manual (x1)

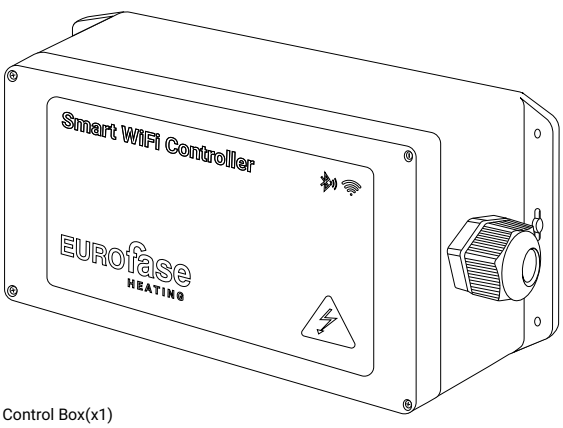

WiFi Control Box(x1)

High Temperature Marrette (x1)

Technical Specifications

SPECIFICATIONS

Environment				
Temperature	-40 to 257F (-40 to 125C)			
Humidity	5% to 85% Relative Humidity (non-condensing)			
Location	Indoor/ Outdoor			
Dimensions and Weights (net)				
	Height	Length	Depth	Weight
Module	2.98 in. (7.3 cm)	9.50 in. (24.1 cm)	4.72 in. (12 cm)	1.08 lbs (0.49 kg)
Shipping	3.50 in. (8.92 cm)	11.0 in. (27.9 cm)	5.85 in. (14.5 cm)	8.0 oz (0.22 kg)
Power				
Inputs (max)	120V AC, 208V AC, 240V AC @ 60Hz, 32 amps			
Load Power	7,680W (32 amp resistive load); Max load			
Fuse	5x20mm 4A/250V			
Communication Standard				
Wireless	WiFi / BT 2.4ghz radio frequency			
Regulatory				
Safety and Emissions	FCC Part 15	UL 60730-1	ICES 003	
Contains FCC ID: CN 5024				
Contains IC: CN 0071				
RoHS				
Supported Load Types				
Standard	Non Dimmable Circuits			
Configuration	Relay On/Off type loads (e.g. appliances)			
Terminals				
Screw Tighten Torque	1.34 Nm			
Conductor Type	Copper (Cu)			
Minimum Supported Firmware: V18.00				

Installation / Safety Information

Responsibility for determining suitability for use in any application / equipment lies solely on the purchaser. Suitability for use in your application is determined by applicable standards such as UL and cUL and the completed system involving this component should be tested to those standards. Please consult with local authorities and applicable wiring standards for your application.

WARNING – Isolate mains before installing.
Use only with a properly secured heater

INSTALLATION:

It is highly recommended that you review this document in its entirety before you begin your installation.
For control over Bluetooth, it is recommended that the Controller not be more than 20 feet away from the heater.

1. Mount the WiFi Controller in a suitable location
2. Remove the front cover (4 screws)
3. Make the electrical connections for the power feed and the load (Heater). Wiring diagrams can be found on page 8
4. Reinstall the front cover (4 screws)
5. Download the Eurofase Heating app (Page 9) which can be found in the Apple and Google Play Store.

WIRING DIAGRAM

WiFi Controller wiring with a
240V Two phase feed

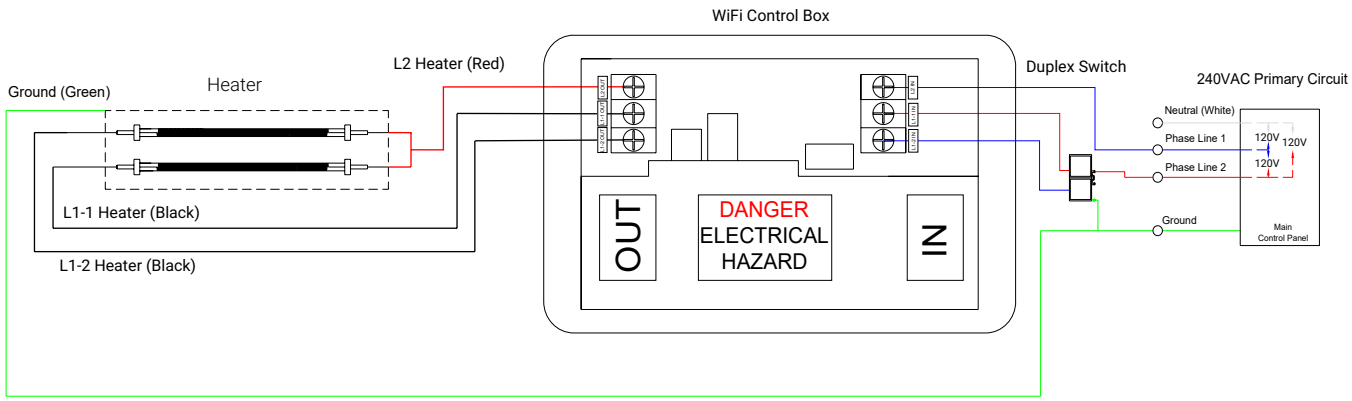

WiFi Controller wiring with a
208V Three phase feed

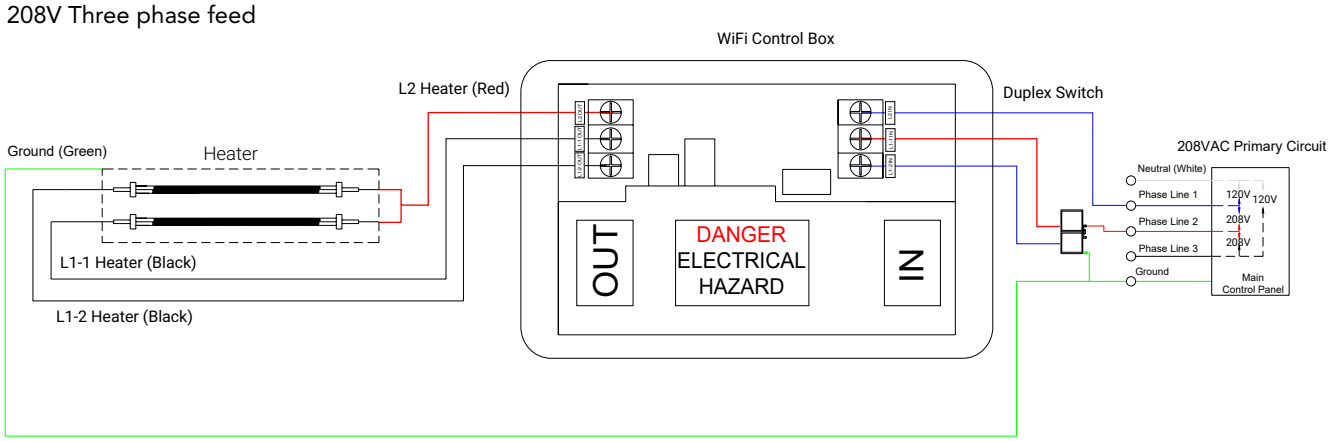

WiFi Controller wiring with
120V Single phase feed

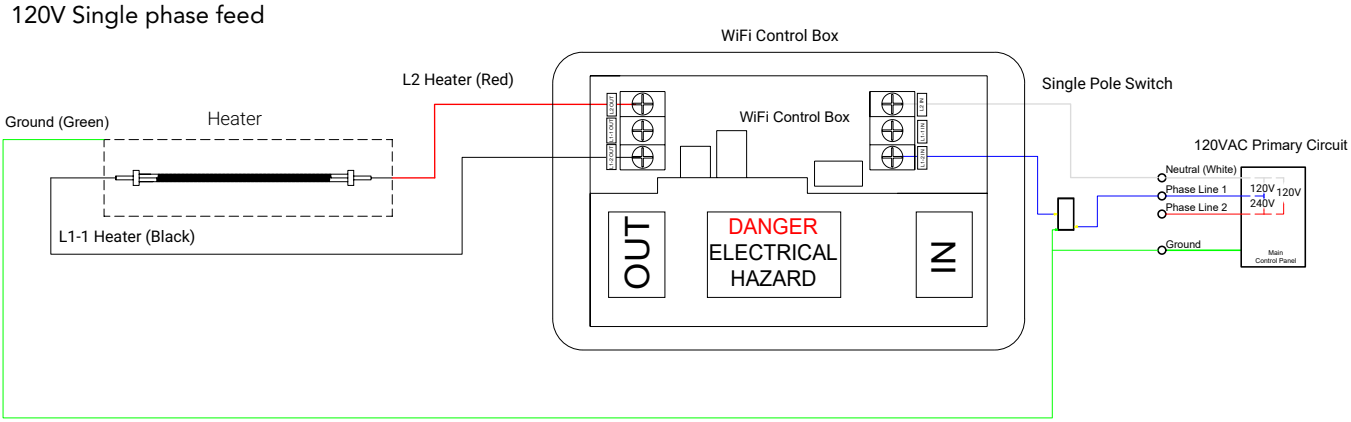

* Use this wiring diagram for single element 240V AC by swaping Neutral with Line 2

Did you know... You have the option to upgrade to our universal relay control box, which unlocks additional functionality such as smart home integration, variant heat control (Dimming), and thermostat capabilities

Scan for more information

App Setup Guide

STEP 1: Downloading the app

EUROFASE HEATING APP

iOS

Scan QR code to download the APP

android

Scan QR code to download the APP

1.1 Compatible operating systems and devices

The Eurofase mobile app is compatible with most Apple and Android smart phones.

1.2 How to install the mobile app

The mobile app must be downloaded via the Apple Store or Google Play Store. In order to find the app simply type Eurofase in the search bar and download it for free.

1.3 How to update the mobile app

The mobile app will be regularly updated. When an update is available, you will be able to download the new version through the Apple Store or Google Play Store, just like any other app.

STEP 2: Log-in

To log in, you must create your user account and receive a verification code via email.

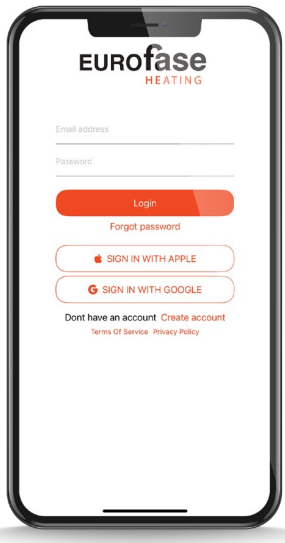

STEP 3: Setup your heater

3.1 Click on the "Add" button to connect your heater.

3.2 Click on the Eurofase Heater icon

3.3 Click Next

3.4 Select your model number
You can enter a nickname at that stage or later through the settings page.

3.5 Select your model number
Setup your WiFi network. WiFi is required for timer functionality.

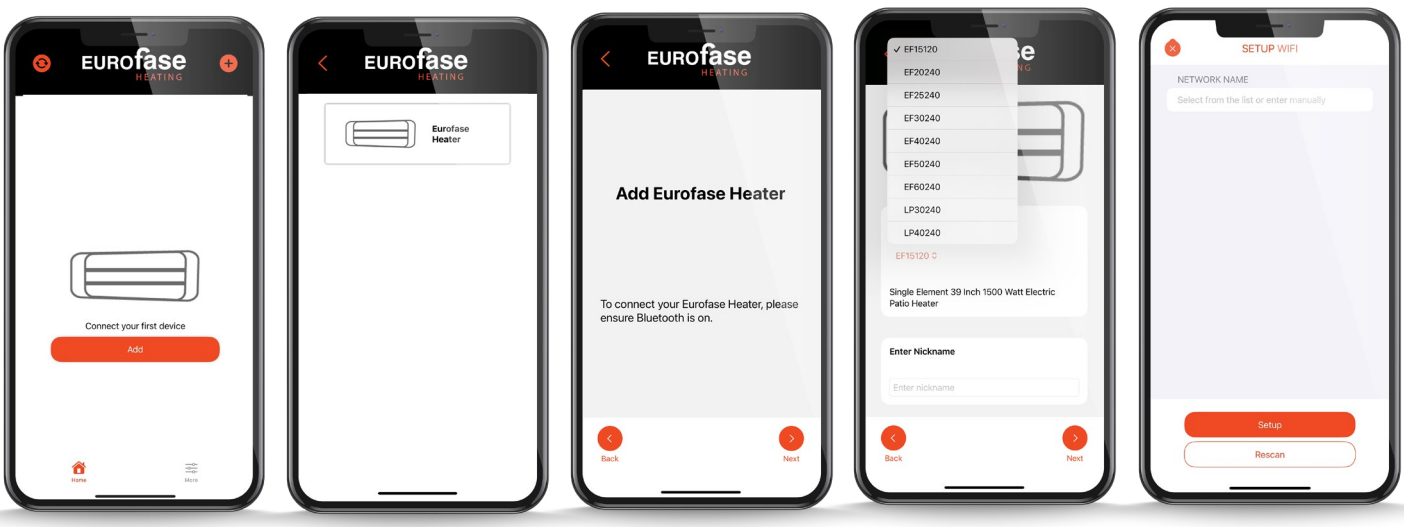

STEP 4: Heater control screens

Click the heater icon

Heater Off

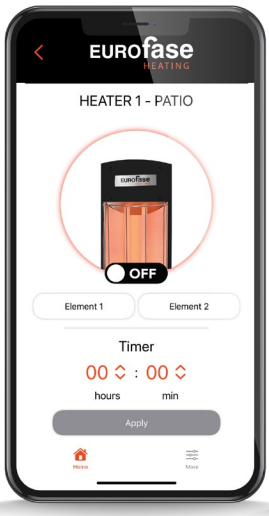

Heater ON-Low (50%)

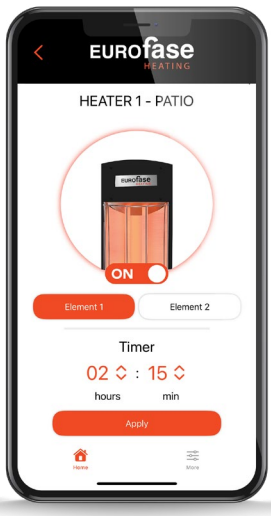

Heater ON-High (100%)

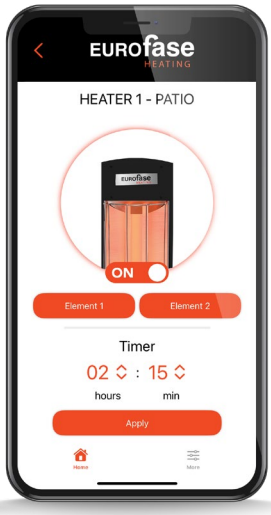

STEP 5: Update

To ensure optimal performance and access to the latest features, we recommend regularly updating the firmware of your device.

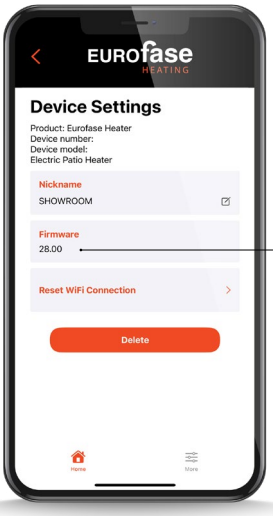

To download the most recent firmware updates, click on the "Firmware" button.

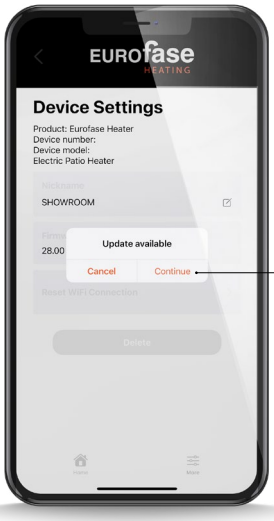

Select "Continue" to start the update process.

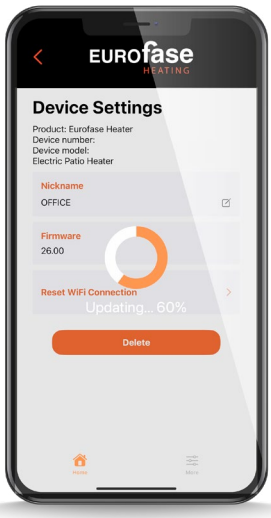

STEP 6: Click "More"

To access your account settings and contact information.

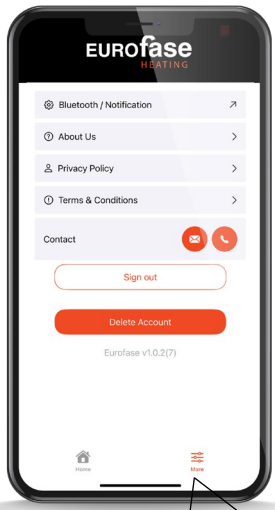

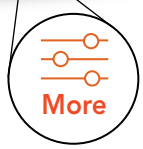

Enjoy your heater!

For additional assistance with the app, please scan the following code

Final STEP:

- ☐ **Please ensure all connections are properly made according to the wiring diagram on Page 8.**
- ☐ **Check the phase line voltage between the two poles of each zone; it should be 120V, 208V, or 240V (line 1 and line 2) or (line 1 and neutral for a 120V installation).**
- ☐ **Initial testing can be conducted after confirming all electrical connections, starting with on/off functionality through the app.**

ELECTRIC SHOCK HAZARD!
Serious injury or death may occur. Disconnect from electrical supply before installing or servicing this controller. Read and follow installation requirements outlined in this manual.

Turn the heater on only when you need heat and avoid any misuse.

Do not use the heater if the ambient temperature exceeds 80°F (26.6°C). Before connecting the appliance make sure that the voltage is the same as indicated on the device and the line supply is corresponding to the relevant electrical code.

This heater MUST be permanently installed. An authorized/licensed electrician is required for hard-wired installation. Do not perform maintenance, or carry out installation or assembly procedure while electrical power is switched on.

WARRANTY REGISTRATION

This Warranty Registration must be submitted within 30 days of purchase to properly activate your warranty. This information is for our internal use only.

SCAN QR CODE TO REGISTER YOUR PRODUCT ONLINE.

The contents of this document and the specifications of this product are subject to change without notice. Eurofase reserves the right to make changes to the specifications and materials contained herein without notice.

Please contact our customer service department or visit our website at EurofaseHeating.com for the latest instruction manual.

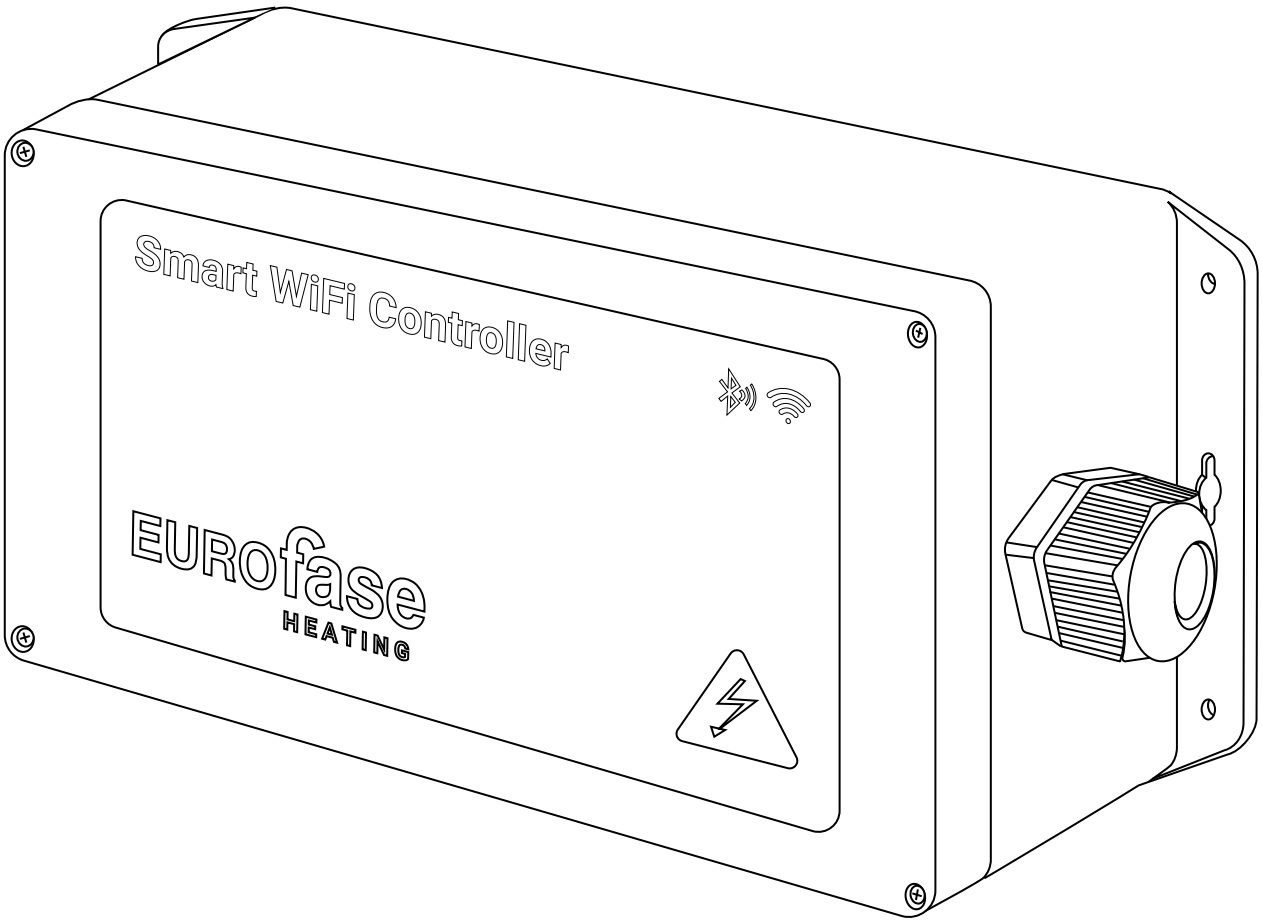

NEED MORE INFORMATION?

If you have further questions please contact us at:

info@EurofaseHeating.com

1-833-346-6682

EUROfase HEATING

LIMITED 3 YEARS WARRANTY

We are incredibly proud of our quality and craftsmanship and offer an industry-leading warranty on all our products. If your Eurofase Heating products ever disappoint, simply give us a shout and we will repair or replace our products within 3 years from the date of purchase.

Eurofase CANADA
33 West Beaver Creek,Richmond Hill, ON L4B 1L8

Eurofase USA
2100 Stemmons Freeway, Suite 4002, Dallas, TX 75207

EurofaseHeating.com
Email: info@EurofaseHeating.com
Tel: 1-833-346-6682